NOTES:
1. SPACING MAY NEED TO BE REDUCED PER REQUIRED WIND LOADS; CONSULT MANUFACTURER.
2. FASTEN PANEL THROUGH SUBSTRATE. THROUGH THE SHIM AS SHOWN; USE A #14 SCREW W/ BONDED WASHER. CONSULT MANUFACTURER FOR NUMBER OF SCREWS PER PANEL REQUIRED.
3. ALTERNATE DETAIL FOR USE ON ALUMINUM PANELS 20'-0 LONG OR LESS AND GALVANIZED PANELS 30'-0" LONG OR LESS (IN LEIU OF FIXED CLIP W/ BOLT); CONSULT MANUFACTURER.
4. 1/4"-14x 7/8" HWH TEK-1 (W/ BONDED WASHER); 6" O.C. FOR BEM0 305 PANEL AND 8" O.C. FOR BEMO 400 PANEL.
5. ALL FASTENERS MUST PENETRATE 3/4" MIN. THROUGH SUBSTRATE.

THIS DETAIL IS GENERAL IN NATURE AND WILL BE MODIFIED TO MEET JOB SPECIFIC CONDITIONS

REFERENCE PAN END AND CLOSURE DETAIL XX/DXX

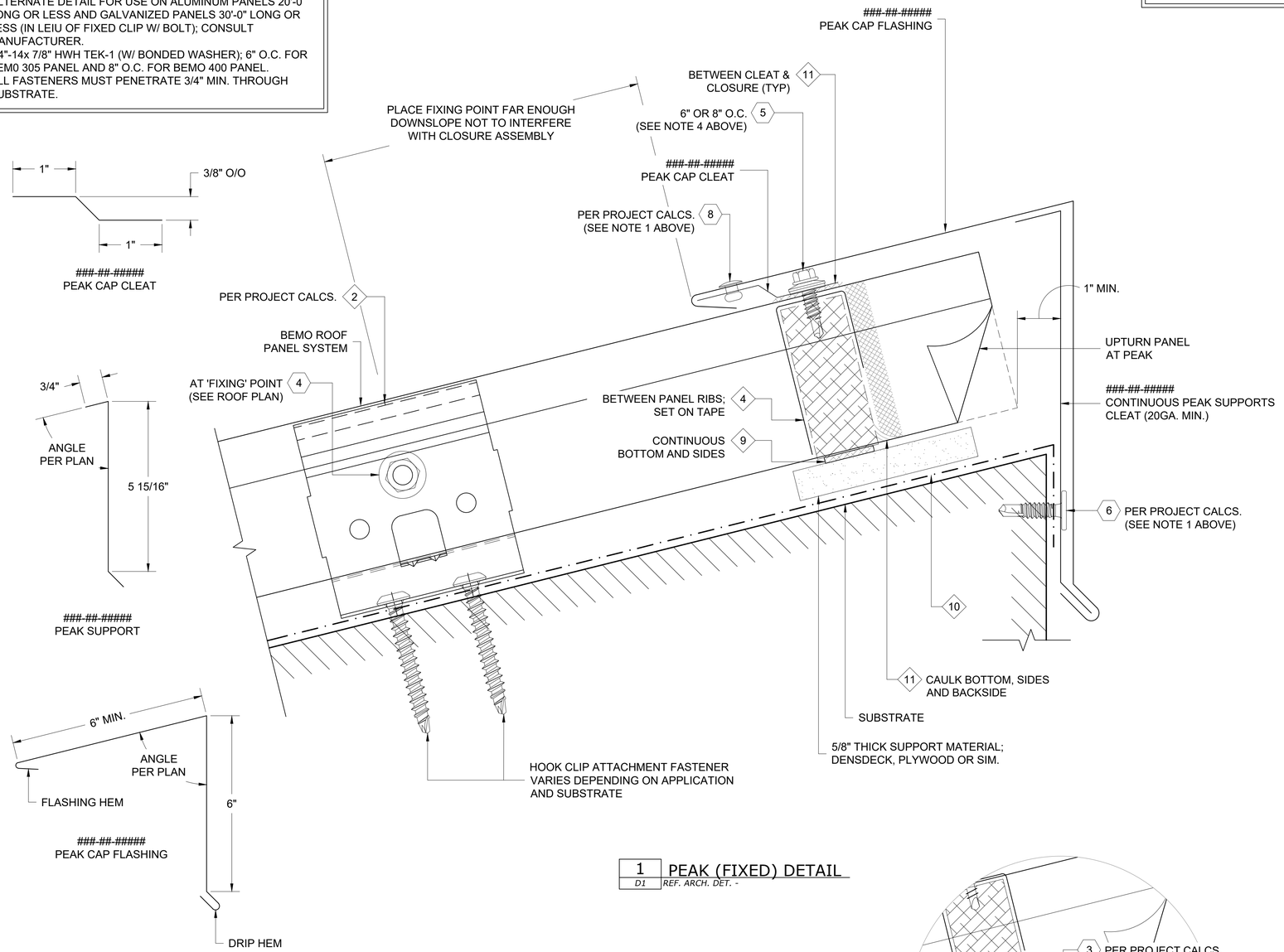

1 PEAK (FIXED) DETAIL
D1 REF. ARCH. DET. -

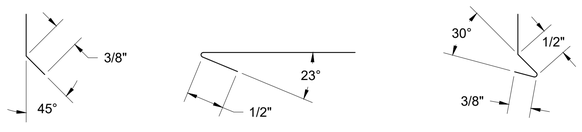

DRIP CLEAT FLASHING HEM DRIP HEM

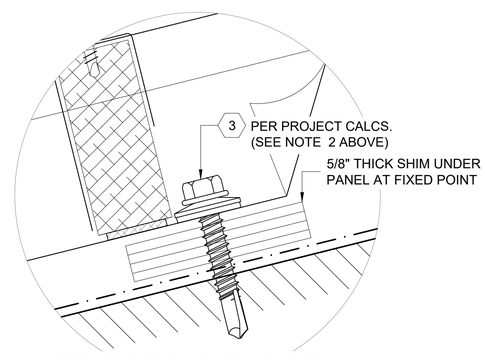

ALTERNATE FIXED POINT OF PANEL AT PEAK
(SEE NOTE 3 ABOVE)

FASTENER DESIGNATIONS

MARK	DESCRIPTION	IMAGE
1	#14-10 x 7" DEKFAST SCREW (OR COMPARABLE)	
2	#14-10 x 2" DEKFAST SCREW (OR COMPARABLE)	
3	1/4"-14x 1 1/2" HWH TEK-3 (W/ BONDED WASHER)	
4	1/4"-20x 3/4" STAINLESS STEEL BOLT ASSEMBLY	
5	1/4"-14x 7/8" HWH TEK-1 (W/ BONDED WASHER)	
6	#10x 3/4" PANCAKE HEAD SCREW	
7	1/4"Ø BULB-TITE RIVET (W/ BONDED WASHER)	
8	3/16"Ø CLOSED END S.S. RIVET	
9	#14-10x 1" SELF-TAPPING (W/ BONDED WASHER)	
10	1/4"-14X 1" TEK-3 STAINLESS STEEL SCREW*	
11	#12-14x 1 1/2" TEK-3 STAINLESS STEEL SCREW*	
12	1/4"-14x 3" PANCAKE HEAD 316SS TYPE "B" FASTENER	

* (1000 HRS OF CORROSION RESISTANT COATING IN ACCORDANCE WITH ASTM B117)

MATERIAL DESIGNATIONS

MARK	DESCRIPTION
1	BEMO HOOK CLIP W/ GALV. BASE
2	BEMO FIXED HOOK CLIP
3	BEMO GABLE HALTER CLIP (30" O.C. MAX.)
4	BEMO METAL/FOAM PROFILE CLOSURE
5	KEYHOLE CLOSURE
6	EXPANDING FOAM TAPE (18 L.F. ROLLS)
7	"GRIP-STRUT" WALKWAY PLANK, 11 7/8" W x 12'-0" LG (2 PLANK WALKWAY)
8	BEMO 300-H OR 300-V STAINLESS STEEL UTILITY CLAMP
9	1/8"x 1" WIDE SEALING TAPE (65 L.F. ROLLS) - (BY OTHERS)
10	BEMO "40 MIL HT MEMBRANE" (3'x 65' ROLLS)
11	"APPROVED" SEALANT (15 L.F. COVERAGE - TUBES) - (BY OTHERS)
12	4"x 6" BEARING PLATE (AT EACH CLIP)

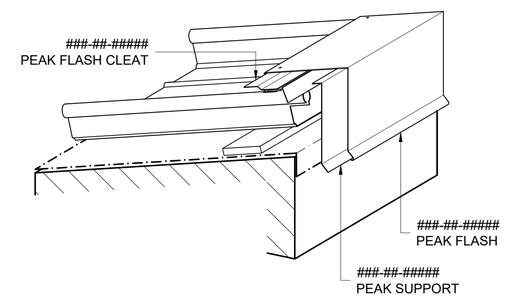

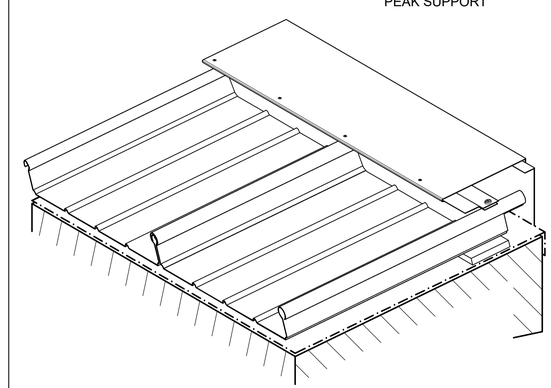

ISOMETRIC VIEW

[NOTE: ISOMETRIC VIEW IS FOR VISUALIZATION ONLY - OBJECTS NOT TO SCALE]

BEMO THE SKY'S THE LIMIT

BEMO STANDARD DETAILS
PEAK (FIXED) DETAIL
PROJECT ADDRESS
CUSTOMER NAME
ARCHITECT NAME

DRAWN:	D. GOSS	1/25/21
CHECKED:		
PROJECT NUMBER:		
7		
6		
5		
4		
3		
2		
1		
NO.	REVISION / ISSUE	DATE

DWG TITLE
BEMO STANDARD DETAIL

SCALE 1' = 1'-0"
REV
DWG NO. D1